DP423C-03&04



Appearance Size

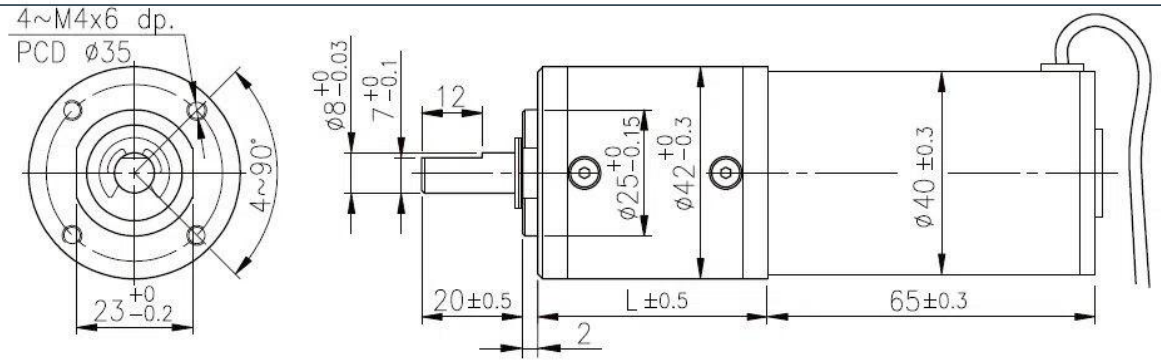

unit:mm

DC Motor + Gearbox Specifications

	Reduction ratio	1/4	1/14	1/17	1/24	1/49	1/84	1/104	1/144	1/212	1/294	1/504	1/624	1/720	1/864	1/1062	1/1470
12V	Rated torque(g.cm)	1.3	4.0	5.0	7.0	12	18	20	20	25	25	30	30	30	30	30	30
	Rated speed(rpm)	930	265	210	150	76	45	37	27	18.5	14	8.3	6.9	5.9	4.9	4.0	4.0
24V	Rated torque(g.cm)	1.0	3.0	4.0	5.5	10	17	20	20	25	25	30	30	30	30	30	30
	Rated speed(rpm)	945	270	215	155	76	45	36	27	18.5	14	8.3	6.9	5.9	4.9	6.54.0	4.0
	Rotation direction	CW															
	Length(L-mm)	32.5	39.2			45.9				52.6						59.6	

DC Motor Specifications

Rated volt(V)	Rated torque(g.cm)	Rated speed(rpm)	Rated current(mA)	No load speed(rpm)	No load current(mA)	Weight(g)
12	430	3750	<=2000	4500	<=500	310
24	350	3800	<=820	4500	<=220	310

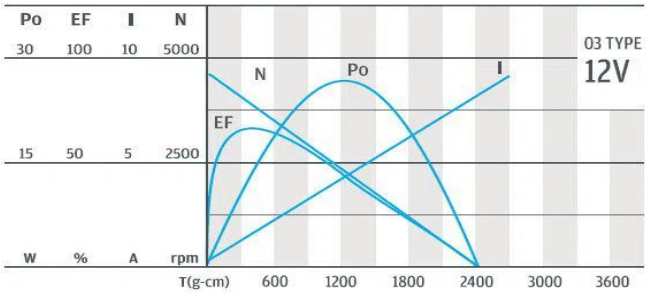

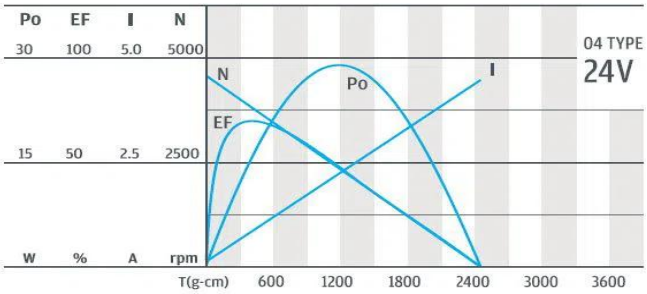

* Specification can be customized as the inquiry. Contact: sales@ichmo.com

©I.CH Motion® 2020
Specifications subject to change without notice.